SIEMENS
SINAMICS
SINAMICS G120X
Master the elements with the infrastructure drive for pump, fan and compressor applications
usa.siemens.com/sinamics-g120x

Simple and direct, the G120X checks all the right boxes

Motors turn more pumps, fans and compressors than anything else, and using drives to run them offers substantial benefits. With the G120X, Siemens introduces an infrastructure drive built on simplicity.

- ☒ Simple to select, configure, order, operate
- ☒ Quick setup and integration
- ☒ Reliable operations for reduced downtime

Learn more. Click code if viewing online.

THE X FACTORS

Ten reasons SINAMICS G120X is right for you

1

Easy to select and order

Online tool and single order number for easy, fast selection and ordering

The process of configuring and ordering SINAMICS G120X has been reduced to one order number for a drive, control unit, communication and user interface (high-resolution color keypad).

1. Go to the DT Configurator
2. Click a few simple choices
3. Order the drive
4. Go on break

Your complete G120X drive arrives with everything needed ready to run — right out of the box.

Learn more. Click code if viewing online.

2

Easy to program, easy to use

Siemens makes it easy with a new, intuitive, simple and quick startup process

Save time with our simple user interfaces and choose local or Wi-Fi-based remote startup and monitoring.

- High-resolution color keypad (IOP-2) guides you with built-in help
- Optional Wi-Fi-enabled Smart Access module for startup using mobile devices with a range of 164 feet
- No special software, no special training
- Preset to run IEC or NEMA motors of matching power rating

Learn more. Click code if viewing online.

3

Reliability and service life

Engineered to operate even in the toughest environments

The same research, development, innovation and testing processes for SINAMICS industrial drives have been applied to the G120X.

- Extended operating temperatures of -4º F to 140º F (131º F for PROFINET, EtherNet/IP™)
- 3C2 conformal coating
- Optional Class 3C3 coating to withstand harsh environments

Learn more. Click code if viewing online.

4

Energy efficiency, low maintenance ... designed for uptime

G120X performs effectively and efficiently with standard motors

Efficient operation using high-efficiency motors. Built-in pump and fan functions reduce repair costs. Access to system diagnostics allows for optimization and maintenance strategies.

- Supports high-efficiency synchronous reluctance and permanent magnet synchronous motors
- Remote monitoring and diagnostics using optional Wi-Fi-enabled Smart Access module
- Integral memory card slot and SD card backup streamlines cloning, restoring, replacement and expansion

Learn more. Click code if viewing online.

5

Easier integration, digitalization

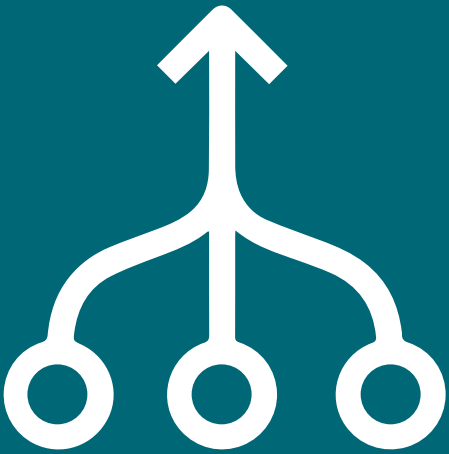

Cloud-based analytics with SINAMICS CONNECT 300 and Smart Access remote monitoring

With built-in PROFINET and EtherNet/IP™, G120X easily integrates into virtually any automation scheme, especially Siemens Totally Integrated Automation (TIA).

- Pluggable I/O terminals for quick and easy connections
- SINAMICS CONNECT and Analyze MyDrives allow drive data to be shared via the MindSphere cloud
- Optional Smart Access module captures and stores drive data

Learn more. Click code if viewing online.

6

Consistent with SINAMICS drives

The same expertise behind the proven SINAMICS family—enhanced

The G120X is the latest innovation in the family of SINAMICS drives. Its enhanced features are easily engaged with the familiar user interface to select, install, start-up, operate and monitor.

- Same selection toolbox: DT Configurator, SIZER, SINAMICS Selector App
- Same operator panel and Smart Access module as G120, with added functions for pumps, fans and compressors

Learn more. Click code if viewing online.

7

UL-rated rugged duty

A new UL61800-5-1 design with 100,000 A short circuit current rating (SCCR)

The G120X already addresses evolving global product and safety standards.

- Meets the latest and upcoming UL, NEMA and EN/IEC standards for 2019 and beyond
- UL61800-5-1 design and cULus certification with 100,000 A SCCR through rigorous testing ensures improved safety and reduces cost
- Standard integrated and hardware-based SIL3-certified Safe Torque Off

Learn more. Click code if viewing online.

8

Cost- and space-efficient

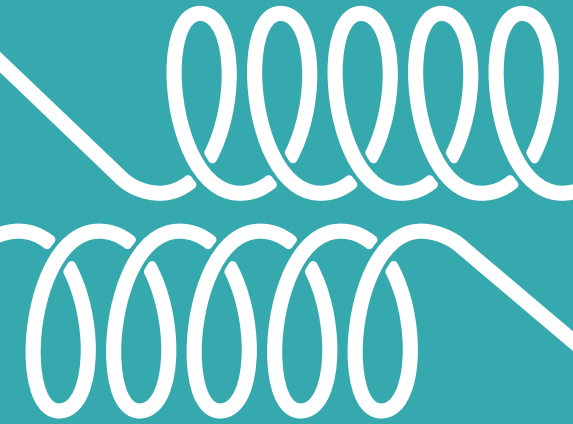

Compact design, integral DC choke, long motor cables up to 1,476 feet and add-on push-through kit

The initial savings are just the beginning. Additional features further reduce the installed cost of the G120X.

- Optional push-through kit reduces or eliminates cabinet fans
- Integral DC choke removes the need for an external line reactor
- Unshielded long cables up to 1,476 feet eliminate need for output choke or filter

Learn more. Click code if viewing online.

9

Efficient installation and operation

Reduced learning curve and reduced engineering

The seamless design of the G120X offers a wide power range up to 700 hp (630 kW) and a wide range of voltages, all with the same look, feel and user interface.

- Built-in DC choke improves grid and EMC performance and can be connected to a "stiff" or "weak" supply system without an external line reactor
- Compact and space-optimized designs with side-by-side installation

Learn more. Click code if viewing online.

10

Siemens expertise

We're here for you with intelligence and support across the G120X life-cycle

It's simple, seamless, and up and running in minutes—and if you need us for any reason, Siemens has your back.

- Warranty: 24-months (6-months added upon drive registration, extending the total standard warranty to 2½-years)
- 3- or 5-year extended exchange options increase warranty up to 7½-years
- Tech support: Toll-free (800) 333-7421, plus online and our convenient app

Learn more. Click code if viewing online.

We’ve got your number

You can easily configure and order the entire drive using one 16-digit part number.

The diagram below shows you how to configure a G120X to specifically address your requirements.

The G120X drive will arrive with everything you need, ready to run a standard NEMA or IEC motor of matching power.

Learn more.
Click code if viewing online.

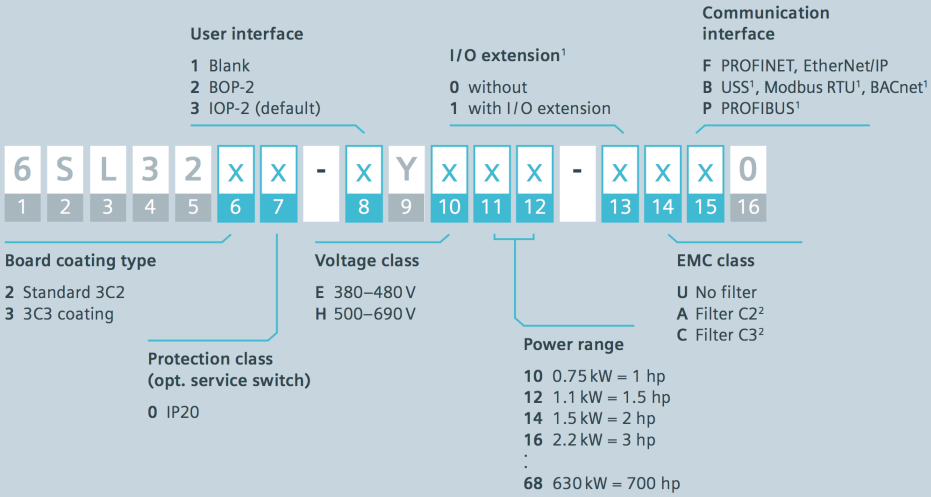
User interface
1 Blank
2 BOP-2
3 IOP-2 (default)
I/O extension[1]
0 without
1 with I/O extension
Communication interface
F PROFINET, EtherNet/IP
B USS[1], Modbus RTU[1], BACnet[1]
P PROFIBUS[1]
6 S L 3 2 X X - X Y X X X - X X X 0
1 2 3 4 5 6 7 8 9 10 11 12 13 14 15 16
Board coating type
2 Standard 3C2
3 3C3 coating
Protection class (opt. service switch)
0 IP20
Voltage class
E 380–480 V
H 500–690 V
Power range
10 0.75 kW = 1 hp
12 1.1 kW = 1.5 hp
14 1.5 kW = 2 hp
16 2.2 kW = 3 hp
:
68 630 kW = 700 hp
EMC class
U No filter
A Filter C2[2]
C Filter C3[2]

Published by
Siemens Industry, Inc.

5300 Triangle Parkway, Suite 100
Norcross, GA 30092

(770) 871-3800

Order No. DRFB-G120X-0319

Printed in USA
© 2019 Siemens Industry, Inc.

usa.siemens.com/motioncontrol

This brochure contains only general descriptions or performance features, which do not always apply in the manner described in concrete application situations or may change as the products undergo further development. Performance features are valid only if they are formally agreed upon when the contract is closed.

Siemens is a registered trademark of Siemens AG. Product names mentioned may be trademarks or registered trademarks of their respective companies. Specifications are subject to change without notice.